Feeding Concepts

46060 Noblesville
15235 Herriman Blvd.
Phone 317-773-2040
Fax
E-mail zach@feedingconcepts.com

Customer	BTM Company
Street	300 Davis Rd.
ZIP code / City	48040 Marysville
Phone	810-364-4567
Fax	
E-mail	

End customer	BTM Company
Street	300 Davis Rd.
ZIP code / City	48040 Marysville
Phone	810-364-4567
Fax	
E-mail	

Project name	BTM FC-24-20467
Job number	FC-24-20467
Project description	Bolt Feeder System
Commission	
Responsible for project	
Created on	6/12/24
Project end	
Edit date	11/23/24
by (short name)	Zach Beck
Number of pages	18

Place of installation	
Manufacturer (company)	Feeding Concepts
Make	
Part feature	
Input lead	Hardwired
Power supply	120VAC
Control voltage	24VDC
Type	
Environmental consideration	
Regulation	
Degree of protection	IP65
Enclosures	Saginaw Enviroline

Table of contents

F06_002_en_US

Function designation	Location designation	Page	Page description	supplementary page field	Date	Edited by
		1	Title page		06/05/24	Zachary Beck
		2	Table of contents : 1 - 18		11/23/24	Zachary Beck
		3	Feeder Cube Schematic		11/23/24	Zachary Beck
		4	Power Supply Schematic		11/15/24	Zachary Beck
		5	PLC Schematic		11/23/24	Zachary Beck
		6	Safety Circuit		11/05/24	Zachary Beck
		7	IO LINK MASTER		11/23/24	Zachary Beck
		8	IO HUB#1		11/23/24	Zachary Beck
		9	IO HUB#2		11/23/24	Zachary Beck
		10	IO HUB#3		11/23/24	Zachary Beck
		11	IO HUB#4		11/23/24	Zachary Beck
		12	Network Map		11/23/24	Zachary Beck
		13	Stepper Driver Schematics		11/23/24	Zachary Beck
		14	SMC Valve Manifold 1		11/23/24	Zachary Beck
		15	SMC Valve Manifold 2		11/23/24	Zachary Beck
		16	SMC Valve Manifold 3		11/23/24	Zachary Beck
		17	Panel Layout		11/23/24	Zachary Beck
		18	Enclosure Layout		11/23/24	Zachary Beck

240VAC Single Phase Input Voltage
16.8FLA

FEEDER CONTROLS FLA = 13.5A

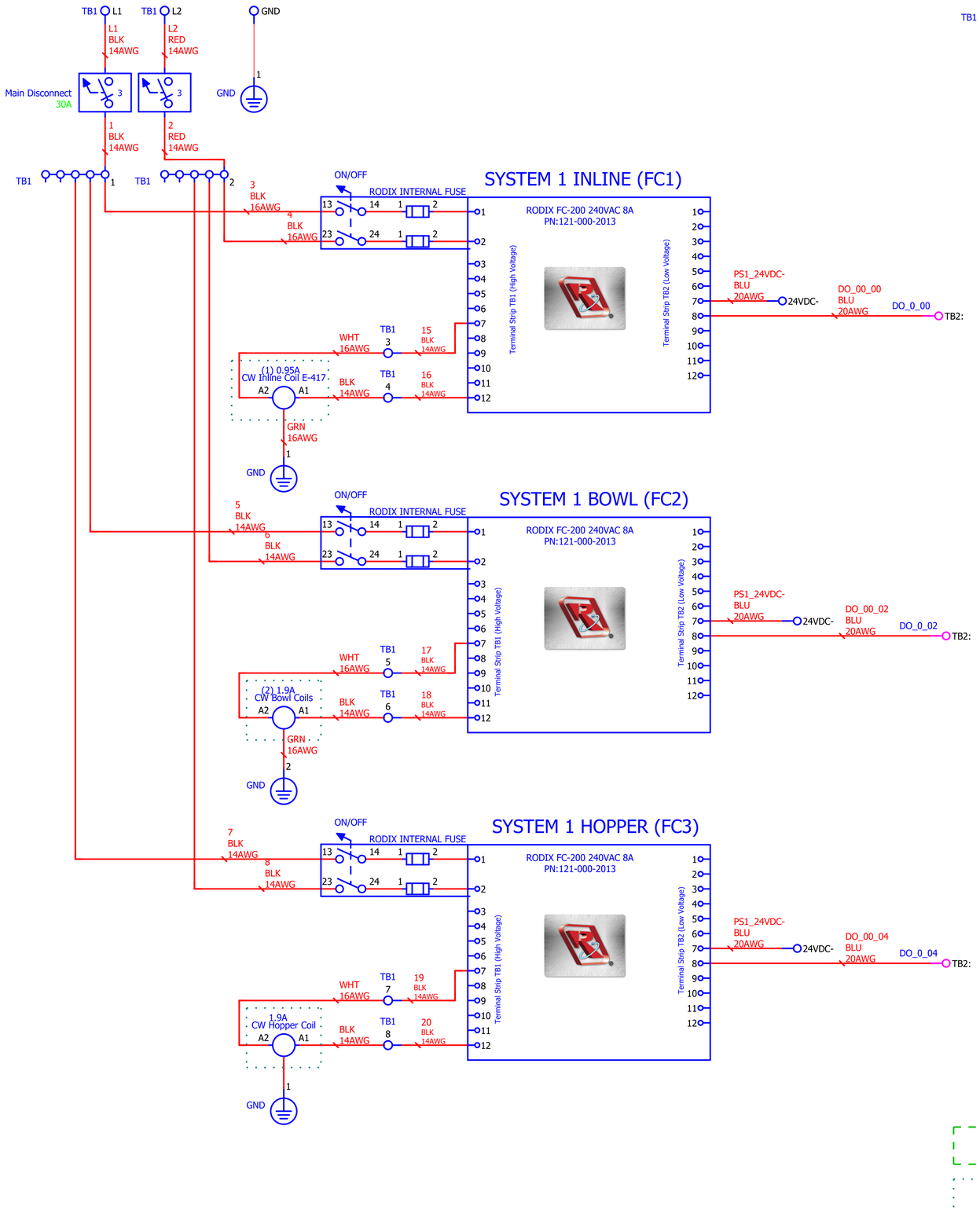

= MOUNTED TO PANEL DOOR

= OUTSIDE CONTROL PANEL

Project description: **Bolt Feeder System**		Drawing number: FC-24-20467CP
		Customer number:
Modification / Date / Name	Ed. 06/05/24 Zach Beck	Customer: Feeding Concepts, 15235 Herriman Blvd.
	Appr. 11/23/24 Zachary Beck	
Original	Feeder Cube Schematic	Function designation: = / Location designation: +
Replacement of		
Replaced by	Commission	Pg. 3
Previous page 2	Total no. of pages 18	Page group 18 / Next page 4

POWER SUPPLY INPUT CURRENT: 3 AMPS

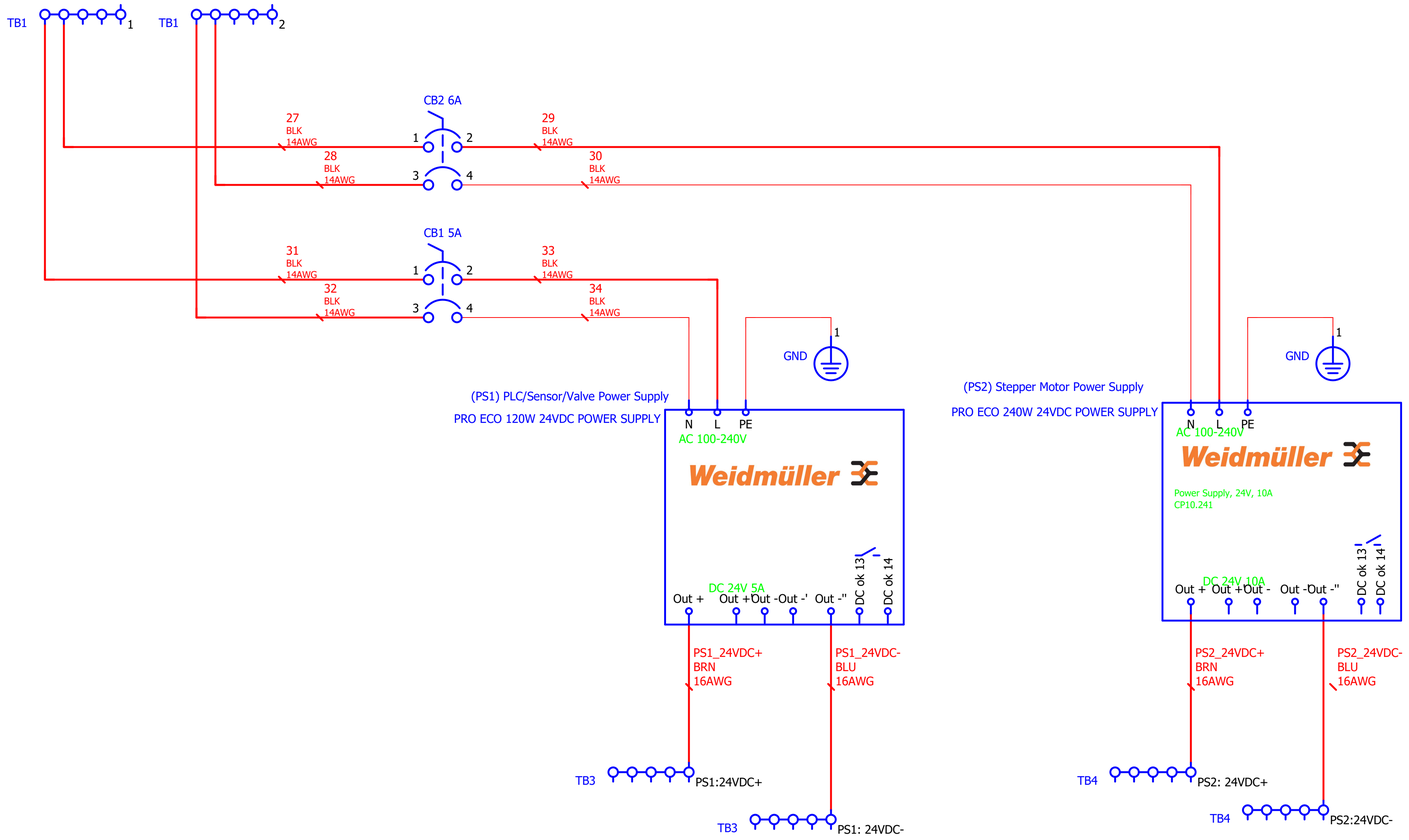

Project description **Bolt Feeder System**						Drawing number FC-24-20467CP	
						Customer number	
Modification	Date	Name		Date	Name	Customer Feeding Concepts 15235 Herriman Blvd.	
			Ed.	06/05/24	Zach Beck		
			Appr.	11/23/24	Zachary Beck		
			Power Supply Schematic				
Original						Function designation =	Location designation +
Replacement of							
Replaced by			Commission				Pg. 4
Previous page 3			Total no. of pages 18			Page group 18	Next page 5

PLC 1
IP ADDRESS: 192.168.1.12

1769-L16ER-B1BB

Allen-Bradley by ROCKWELL AUTOMATION

TB3 PS1_24VDC+ — PS1_24VDC+ BRN 20AWG — VDC+
TB3 PS1_24VDC- — PS1_24VDC- BLU 20AWG — VDC-
TB3 PS1_24VDC+ — PS1_24VDC+ BRN 20AWG — FP+
TB3 PS1_24VDC- — PS1_24VDC- BLU 20AWG — FP-

TB2:I:00 Shuttle #1 Extended	DI_00_00 BLU 20AWG	0	00:0:I.Data.0
TB2:I:01 Shuttle #1 Retracted	DI_00_01 BLU 20AWG	1	00:0:I.Data.1
TB2:I:02 Shuttle #1 Part Present	DI_00_02 BLU 20AWG	2	00:0:I.Data.2
TB2:I:03 Shuttle #2 Extended	DI_00_03 BLU 20AWG	3	00:0:I.Data.3
TB2:I:04 Shuttle #2 Retracted	DI_00_04 BLU 20AWG	4	00:0:I.Data.4
TB2:I:05 Shuttle #2 Part Present	DI_00_05 BLU 20AWG	5	00:0:I.Data.5
TB2:I:06 Bowl #1 Bowl Level	DI_00_06 BLU 20AWG	6	00:0:I.Data.6
TB2:I:07 Bowl #1 Full Track Switch	DI_00_07 BLU 20AWG	7	00:0:I.Data.7
TB2:I:08 Bowl #2 Bowl Level Sensor	DI_00_08 BLU 20AWG	8	00:0:I.Data.8
TB2:I:09 Bowl #2 Full Track Switch	DI_00_09 BLU 20AWG	9	00:0:I.Data.9
TB2:I:10 SPARE	DI_00_10 BLU 20AWG	10	00:0:I.Data.10
TB2:I:11 SPARE	DI_00_11 BLU 20AWG	11	00:0:I.Data.11
TB2:I:12 Safety Relay Status	DI_00_12 BLU 20AWG	12	00:0:I.Data.12
TB2:I:13 Reset PB	CYCLE RESET (13 — 14)	13	00:0:I.Data.13

00:0:O.Data.0	0	DO_00_00 BLU 20AWG → FC1_TB2_8 System 1 Inline Enable
00:0:O.Data.1	1	DO_00_01 BLU 20AWG → FC4_TB2_8 System 2 Inline Enable
00:0:O.Data.2	2	DO_00_02 BLU 20AWG → FC2_TB2_8 System 1 Bowl
00:0:O.Data.3	3	DO_00_03 BLU 20AWG → FC5_TB2_8 System 2 Bowl
00:0:O.Data.4	4	DO_00_04 BLU 20AWG → FC3_TB2_8 System 1 Hopper
00:0:O.Data.5	5	DO_00_05 BLU 20AWG → FC6_TB2_8 System 2 Hopper
00:0:O.Data.6	6	DO_00_06 BLU 20AWG → O:06 — 42 BLU 20AWG — SR1 MAIN AIR DISCONNECT — 43 BLU 20AWG — 28
00:0:O.Data.7	7	DO_00_07 BLU 20AWG → S34 Safety Relay Reset
00:0:O.Data.8	8	DO_00_08 BLU 20AWG → Stepper Drive 1 Lock Release A1 — IFR1 — A2 — PS1_24VDC- BLU 16AWG — TB2 PS1:24VDC-
00:0:O.Data.9	9	DO_00_09 BLU 20AWG → Stepper Drive 23 Lock Release IFR2 A2 — PS1_24VDC- BLU 16AWG — TB2 PS1:24VDC-
00:0:O.Data.10	10	
00:0:O.Data.11	11	

ENET PORT #1 — ENET CBL4 — 8-Port Ethernet Switch

1240900000
0.13 A at 24 V

Weidmüller

RJ45 2	24VDC+	PS1_24VDC+ BRN 20AWG → PS1:24VDC+
RJ45 3		
RJ45 4	24VDC-	PS1_24VDC- BLU 20AWG → PS1:24VDC-
RJ45 5		
RJ45 6	GND	GRN 20AWG → GND
RJ45 7		
RJ45 8		
RJ45 9		

Project description: Bolt Feeder System			Drawing number: FC-24-20467CP		
			Customer number:		
Modification	Date	Name		Date	Name
			Ed.	06/05/24	Zach Beck
			Appr.	11/23/24	Zachary Beck
			PLC Schematic		
Original			Customer: Feeding Concepts, 15235 Herriman Blvd.		
Replacement of			Function designation: =	Location designation: +	
Replaced by			Commission	Pg. 5	
Previous page 4			Total no. of pages 18	Page group 18	Next page 6

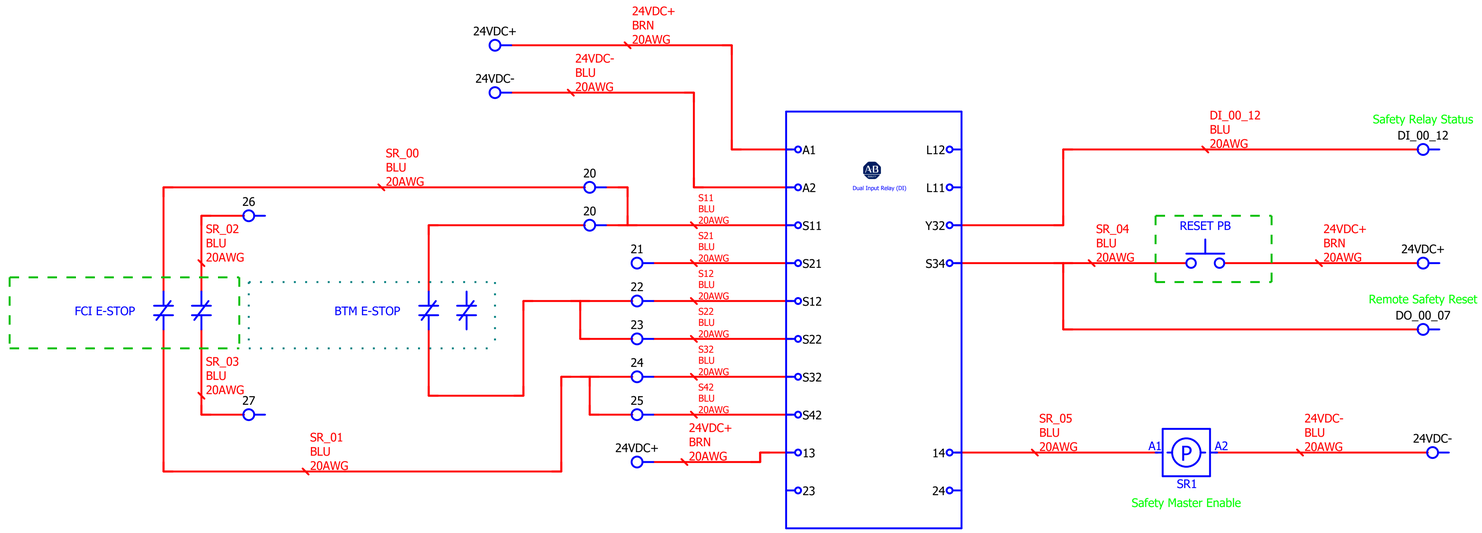

Project description **Bolt Feeder System**						Drawing number FC-24-20467CP Customer number
Modification	Date	Name		Date	Name	Customer Feeding Concepts 15235 Herriman Blvd.
			Ed.	06/05/24	Zach Beck	
			Appr.	11/05/24	Zachary Beck	
			Safety Circuit			
Original						Function designation = / Location designation +
Replacement of						
Replaced by			Commission			Pg. 6
Previous page 5			Total no. of pages 18			Page group 18 / Next page 7

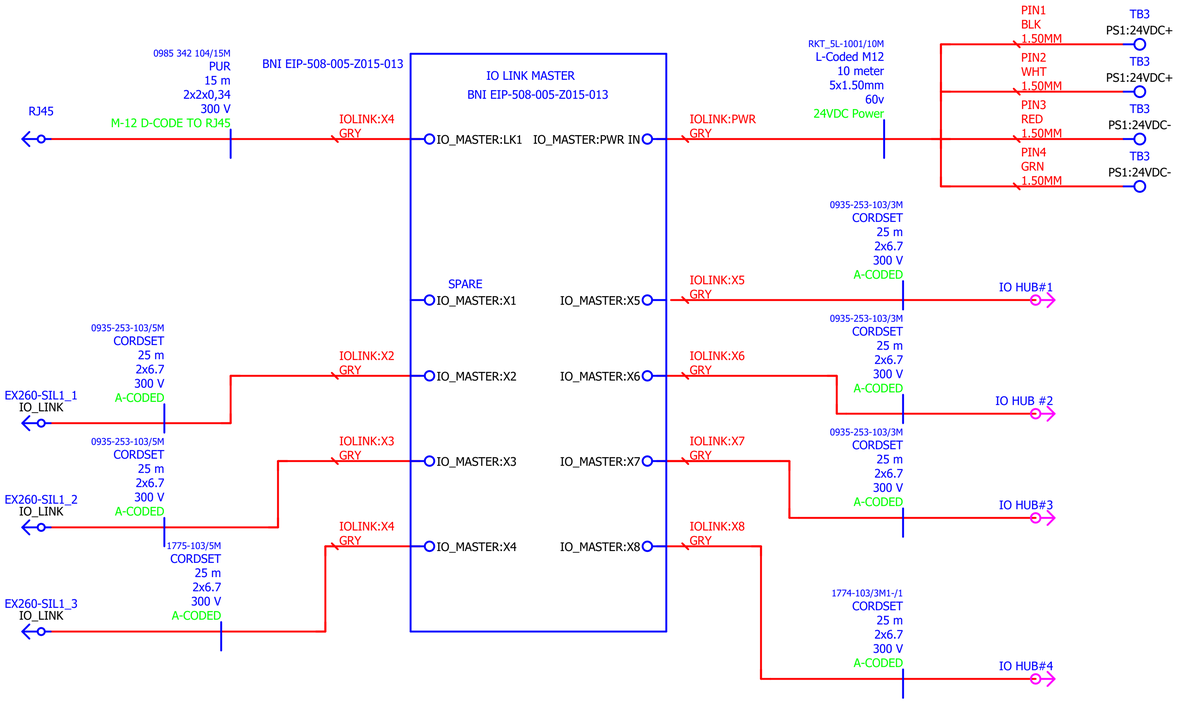



IO LINK MASTER
BNI EIP-508-005-Z015-013

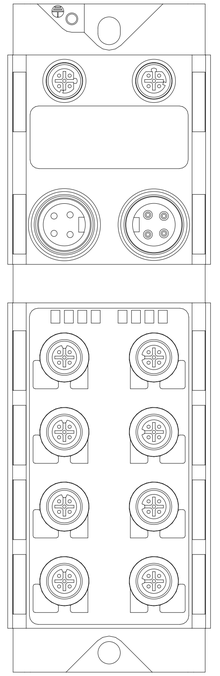

WEB SERVER LOGIN
USERNAME: ADMIN
PASSWORD: BNIEIP

Project description: Bolt Feeder System				Drawing number: FC-24-20467CP	
				Customer number	
Modification	Date	Name		Date	Name
			Ed.	06/05/24	Zach Beck
			Appr.	11/23/24	Zachary Beck
			IO LINK MASTER		
Original				Customer: Feeding Concepts, 15235 Herriman Blvd.	
Replacement of				Function designation: =	Location designation: +
Replaced by			Commission		Pg. 7
Previous page 6			Total no. of pages 18	Page group 18	Next page 8

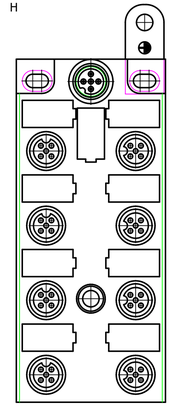

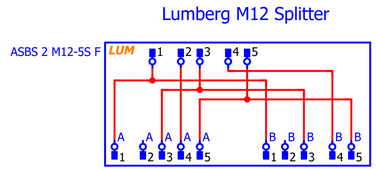

1776-103/3M1-/1
CORDSET
25 m
2x6.7
300 V
A-CODED

IO LINK MASTER

IO HUB #1

BNI-IOL-302-003-K006

UA

Programming Notes:
Byte [0] = Input 0 (Bit is Port)
Byte [1] = Input 1 (Bit is Port)

X:0
X:2
X:4

Splitter Port 1 = IN0
Splitter Port 2 = IN1

ASBS -S F
ASBS .2-S F
ASBS .4-S F

1
2

X:1
X:3

ASBS .1-S F
ASBS .3-S F

M12 CONNECTION

D-M9P
24VDC PNP
DIVERTER#1 Retract

D-M9P
24VDC PNP
DIVERTER #1 EXTEND

D-M9P
24VDC PNP
DIVERTER #3 RETRACT

D-M9P
24VDC PNP
DIVERTER #3 EXTEND

D-M9P
24VDC PNP
DIVERTER #5 RETRACT

D-M9P
24VDC PNP
DIVERTER #5 EXTEND

D-M9P
24VDC PNP
DIVERTER #2 RETRACT

D-M9P
24VDC PNP
DIVERTER #2 EXTEND

D-M9P
24VDC PNP
DIVERTER #4 RETRACT

D-M9P
24VDC PNP
DIVERTER #4 EXTEND

DC(+) 5
OUT 6
DC(-) 7

BRN 20AWG
BLK 20AWG
BLU 20AWG

Project description	Drawing number	FC-24-20467CP
Bolt Feeder System	Customer number	

Modification	Date	Name		Date	Name
			Ed.	06/05/24	Zach Beck
			Appr.	11/23/24	Zachary Beck
			IO HUB#1		

Original	Customer	Feeding Concepts	
Replacement of	15235 Herriman Blvd.		
Replaced by	Commission	Function designation =	Location designation +
Previous page 7	Total no. of pages 18	Page group 18	Next page 9

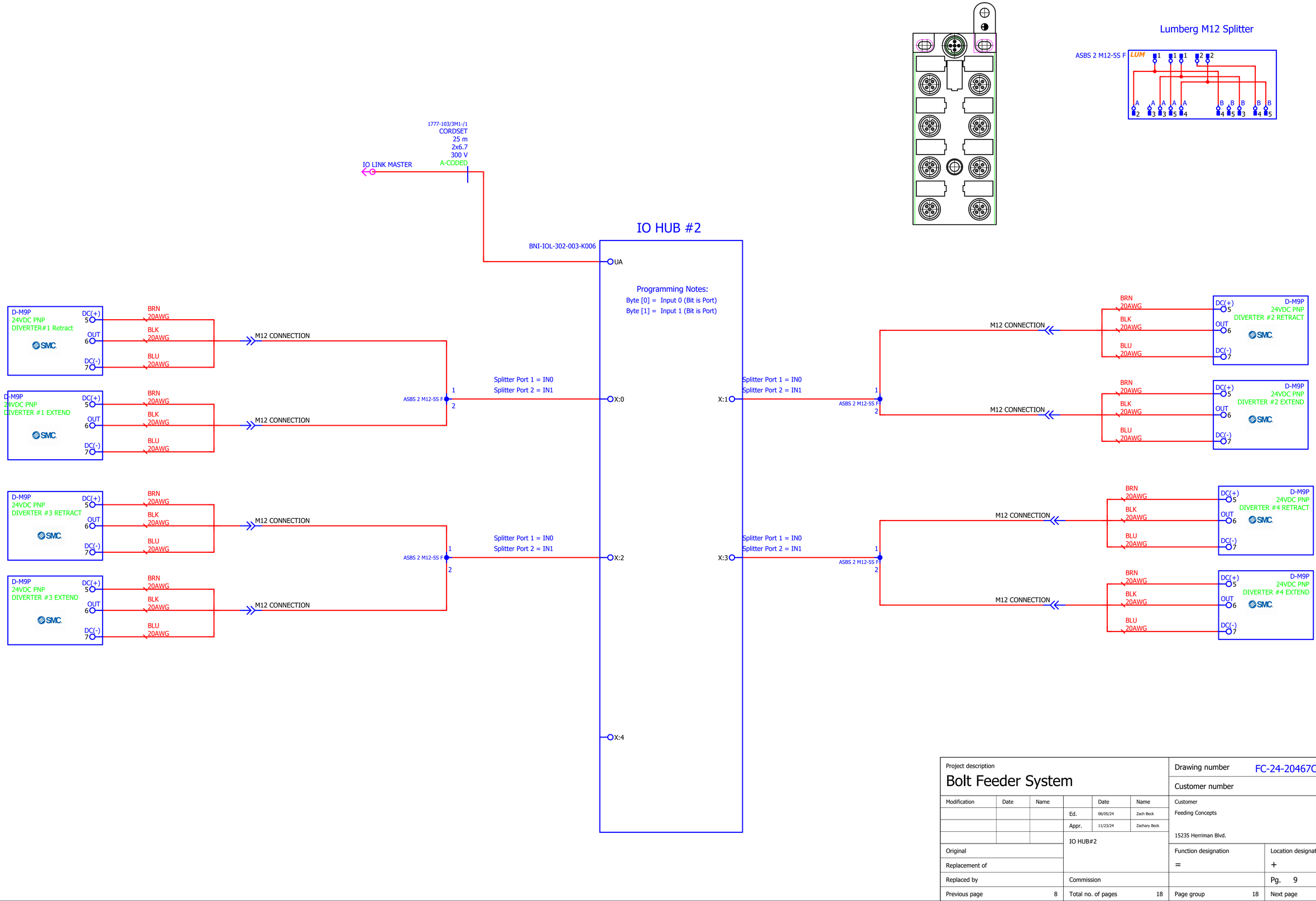
1777-103/3M1-/1
CORDSET
25 m
2x6.7
300 V
A-CODED
IO LINK MASTER
IO HUB #2
BNI-IOL-302-003-K006
UA
Programming Notes:
Byte [0] = Input 0 (Bit is Port)
Byte [1] = Input 1 (Bit is Port)
X:0
X:1
X:2
X:3
X:4
Splitter Port 1 = IN0
Splitter Port 2 = IN1
ASBS 2 M12-5S F
M12 CONNECTION
D-M9P
24VDC PNP
DIVERTER#1 Retract
DIVERTER #1 EXTEND
DIVERTER #3 RETRACT
DIVERTER #3 EXTEND
DIVERTER #2 RETRACT
DIVERTER #2 EXTEND
DIVERTER #4 RETRACT
DIVERTER #4 EXTEND
DC(+) 5
OUT 6
DC(-) 7
BRN 20AWG
BLK 20AWG
BLU 20AWG
Lumberg M12 Splitter
ASBS 2 M12-5S F
LUM

| | | |

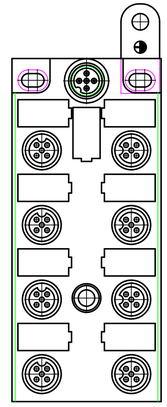

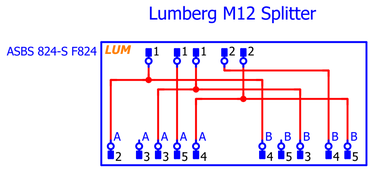

0935-253-103/3M
CORDSET
25 m
2x6.7
300 V
A-CODED

IO LINK MASTER

BNI-IOL-302-003-K006

IO HUB #3

UA

Programming Notes:
Byte [0] = Input 0 (Bit is Port)
Byte [1] = Input 1 (Bit is Port)

X:0
X:2
X:4
X:1
X:3

ASBS 724-S F724
ASBS 720-S F720
ASBS 1131-S F1131
ASBS 718-S F718
ASBS 722-S F722

Splitter Port 1 = IN0
Splitter Port 2 = IN1

M12 CONNECTION

BRN 20AWG
BLK 20AWG
BLU 20AWG

D-M9P
24VDC PNP
DIVERTER#1 Retract

D-M9P
24VDC PNP
DIVERTER #1 EXTEND

D-M9P
24VDC PNP
DIVERTER #2 RETRACT

D-M9P
24VDC PNP
DIVERTER #2 EXTEND

D-M9P
24VDC PNP
DIVERTER #3 RETRACT

D-M9P
24VDC PNP
DIVERTER #3 EXTEND

D-M9P
24VDC PNP
DIVERTER #4 RETRACT

D-M9P
24VDC PNP
DIVERTER #4 EXTEND

D-M9P
24VDC PNP
DIVERTER #5 RETRACT

D-M9P
24VDC PNP
DIVERTER #5 EXTEND

DC(+) 5
OUT 6
DC(-) 7

Project description				Drawing number	FC-24-20467CP
Bolt Feeder System				Customer number	
Modification	Date	Name		Date	Name
			Ed.	06/05/24	Zach Beck
			Appr.	11/23/24	Zachary Beck
			IO HUB#3		
Original					
Replacement of					
Replaced by			Commission		
Previous page 9			Total no. of pages 18		
Customer: Feeding Concepts, 15235 Herriman Blvd.					
Function designation: =			Location designation: +		
Page group 18			Next page 11		Pg. 10

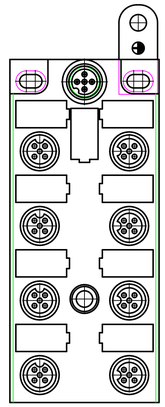

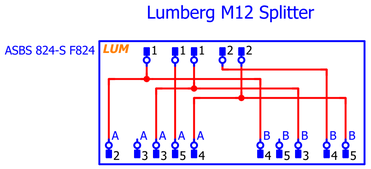

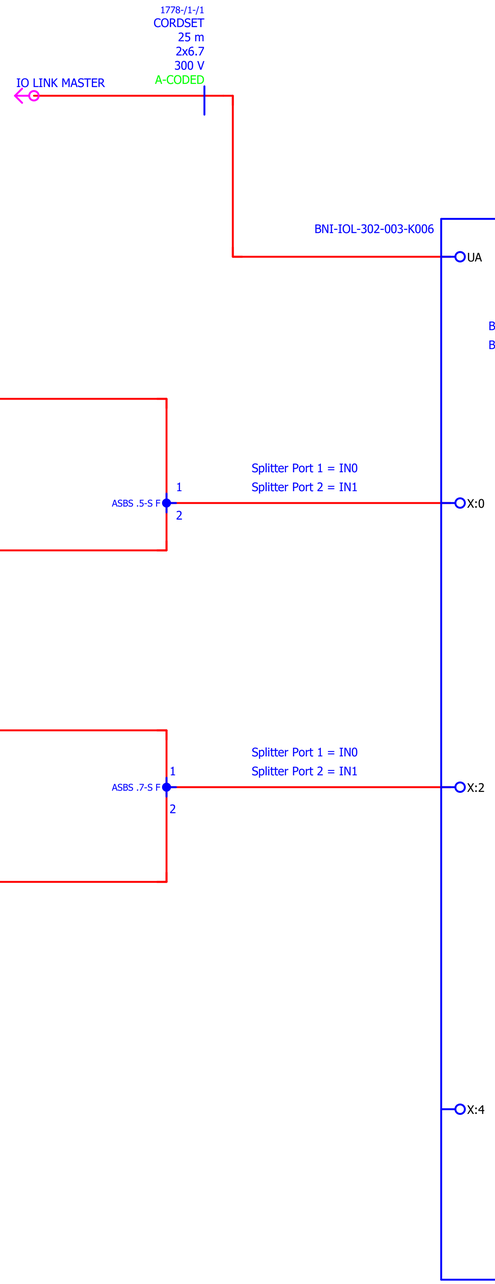

Project description		Drawing number FC-24-20467CP
Bolt Feeder System		Customer number
Modification / Date / Name	Ed. 06/05/24 Zach Beck	Customer: Feeding Concepts, 15235 Herriman Blvd.
	Appr. 11/23/24 Zachary Beck	
Original	IO HUB#4	Function designation = / Location designation +
Replacement of		
Replaced by	Commission	Pg. 11
Previous page 10	Total no. of pages 18	Page group 18 / Next page 12

L16ER COMPACTLOGIX

IP ADDRESS: 192.168.1.10

ENET100
YLW

8-Port Ethernet Switch

ENET103
YLW

ENET101
YLW

ENET102
YLW

STEPPER DRIVE #1

JXCL18-LEFS25EA-250
IP ADDRESS: 192.168.1.11

ENET PORT 1

ENET PORT 2

STEPPER DRIVE #2

JXCL18-LEFS25EA-250
IP ADDRESS: 192.168.1.12

ENET PORT 1

ENET PORT 2

IO LINK MASTER
BNI EIP-508-005-Z015-013

IP ADDRESS: 192.168.1.5

IOLINK:X0
GRY

IOLINK:X2
GRY

IOLINK:X1
GRY

IOLINK:X3
GRY

IOLINK:X5
GRY

IOLINK:X7
GRY

IO HUB #2
BNI IOL-302-002-K006

IO HUB #1
BNI IOL-302-002-K006

Valve Bank #3 (Diverters)
EX260-SIL1

IOLINK:X4
GRY

PORT 1

PORT 2

IO HUB #4
BNI IOL-302-002-K006

IOLINK:X7
GRY

IOLINK:X5
GRY

IO HUB #3
BNI IOL-302-002-K006

Valve Bank #1 (Venturi/Escapements)
EX260-SIL1

PORT 1

PORT 2

IOLINK:X0
GRY

Valve Bank #2 (Diverters)
EX260-SIL1

IOLINK:X2
GRY

PORT 1

PORT 2

Project description		Drawing number FC-24-20467CP
Bolt Feeder System		Customer number
Modification / Date / Name	Ed. 06/05/24 Zach Beck Appr. 11/23/24 Zachary Beck	Customer: Feeding Concepts, 15235 Herriman Blvd.
Original	Network Map	Function designation = / Location designation +
Replacement of		
Replaced by	Commission	Pg. 12
Previous page 11	Total no. of pages 18	Page group 18 / Next page 13

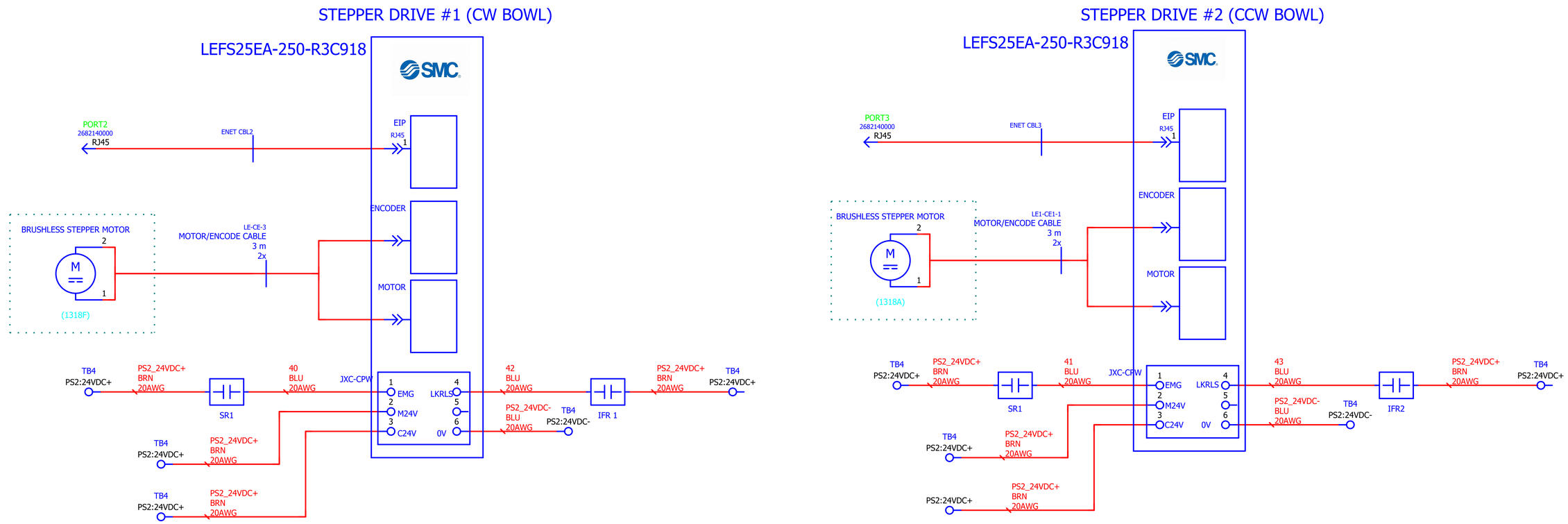

= MOUNTED TO PANEL DOOR

= OUTSIDE CONTROL PANEL

Project description Bolt Feeder System						Drawing number FC-24-20467CP	
						Customer number	
Modification	Date	Name		Date	Name	Customer Feeding Concepts 15235 Herriman Blvd.	
			Ed.	06/05/24	Zach Beck		
			Appr.	11/23/24	Zachary Beck		
			Stepper Driver Schematics				
Original						Function designation =	Location designation +
Replacement of							
Replaced by			Commission				Pg. 13
Previous page 12			Total no. of pages 18			Page group 18	Next page 14

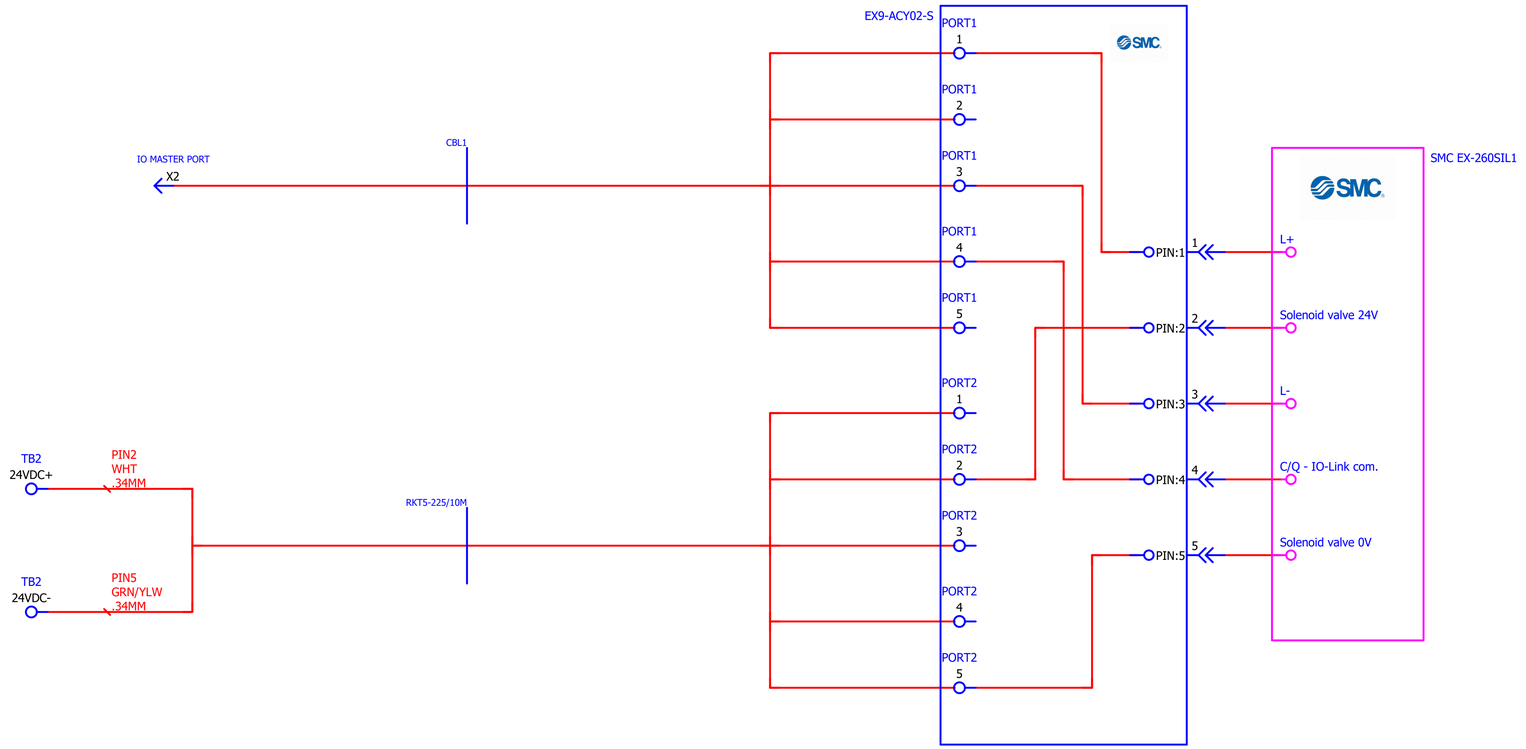

Project description **Bolt Feeder System**						Drawing number	
						Customer number	
Modification	Date	Name		Date	Name	Customer Feeding Concepts 15235 Herriman Blvd.	
			Ed.	06/05/24	Zach Beck		
			Appr.	11/23/24	Zachary Beck		
			SMC Valve Manifold 1				
Original						Function designation =	Location designation +
Replacement of							
Replaced by			Commission				Pg. 14
Previous page 13			Total no. of pages 18			Page group 18	Next page 15

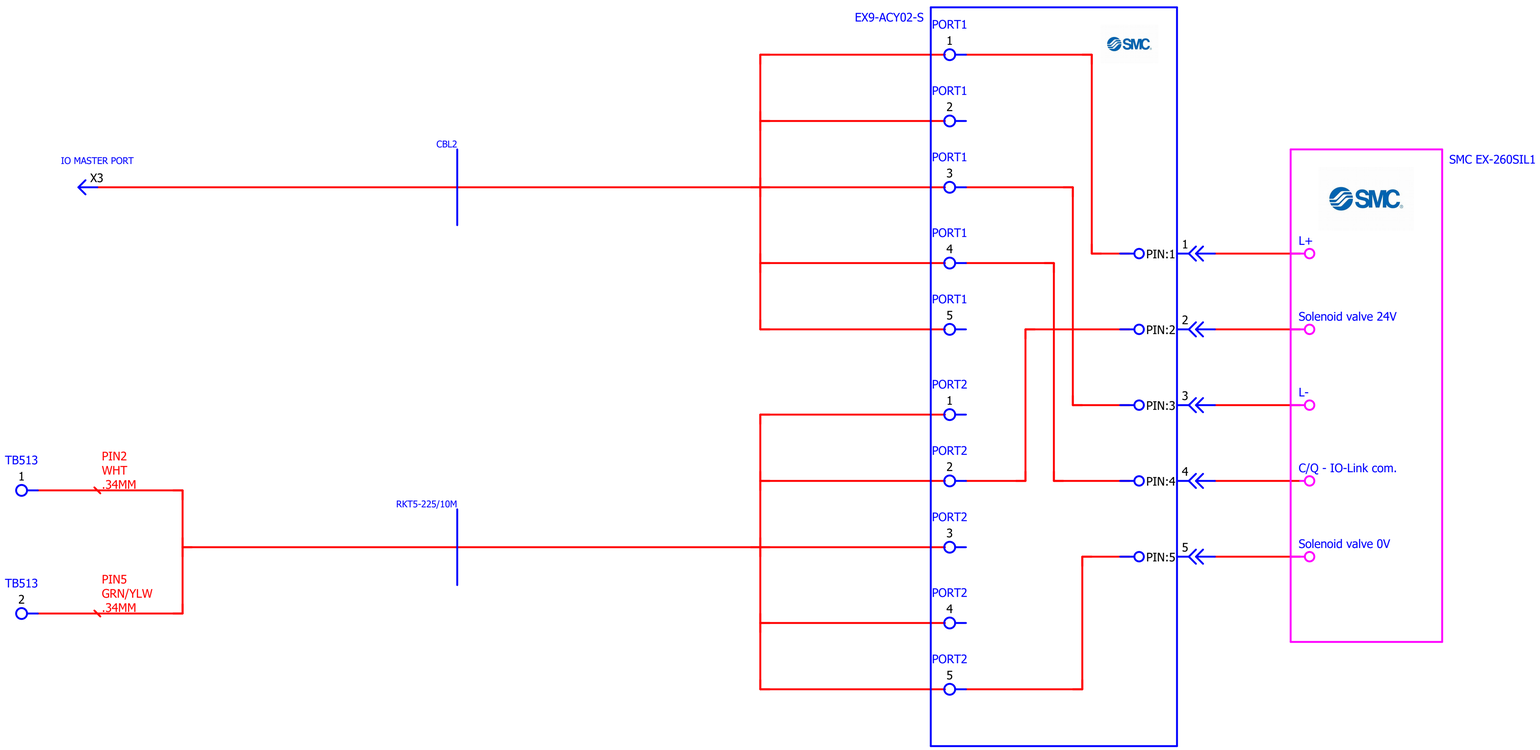

Project description **Bolt Feeder System**						Drawing number Customer number	
Modification	Date	Name		Date	Name	Customer Feeding Concepts 15235 Herriman Blvd.	
			Ed.	06/05/24	Zach Beck		
			Appr.	11/23/24	Zachary Beck		
			SMC Valve Manifold 2				
Original						Function designation =	Location designation +
Replacement of							
Replaced by			Commission				Pg. 15
Previous page 14			Total no. of pages 18			Page group 18	Next page 16

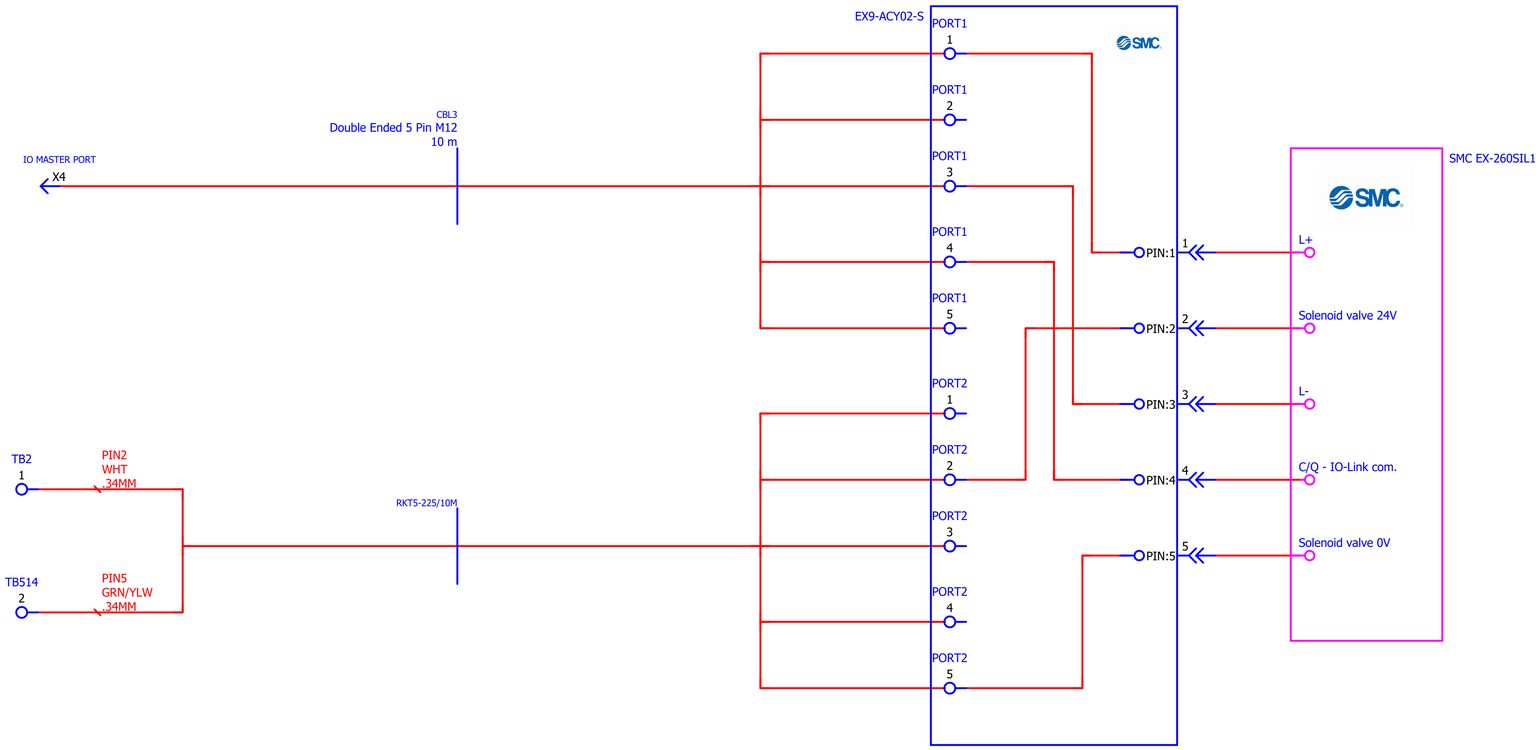

Project description					Drawing number
Bolt Feeder System					Customer number
Modification	Date	Name		Date	Name
			Ed.	06/05/24	Zach Beck
			Appr.	11/23/24	Zachary Beck
			SMC Valve Manifold 3		Customer: Feeding Concepts, 15235 Herriman Blvd.
Original					
Replacement of					Function designation: =
Replaced by			Commission		Location designation: +
Previous page 15			Total no. of pages 18		Pg. 16
					Page group 18 Next page 17

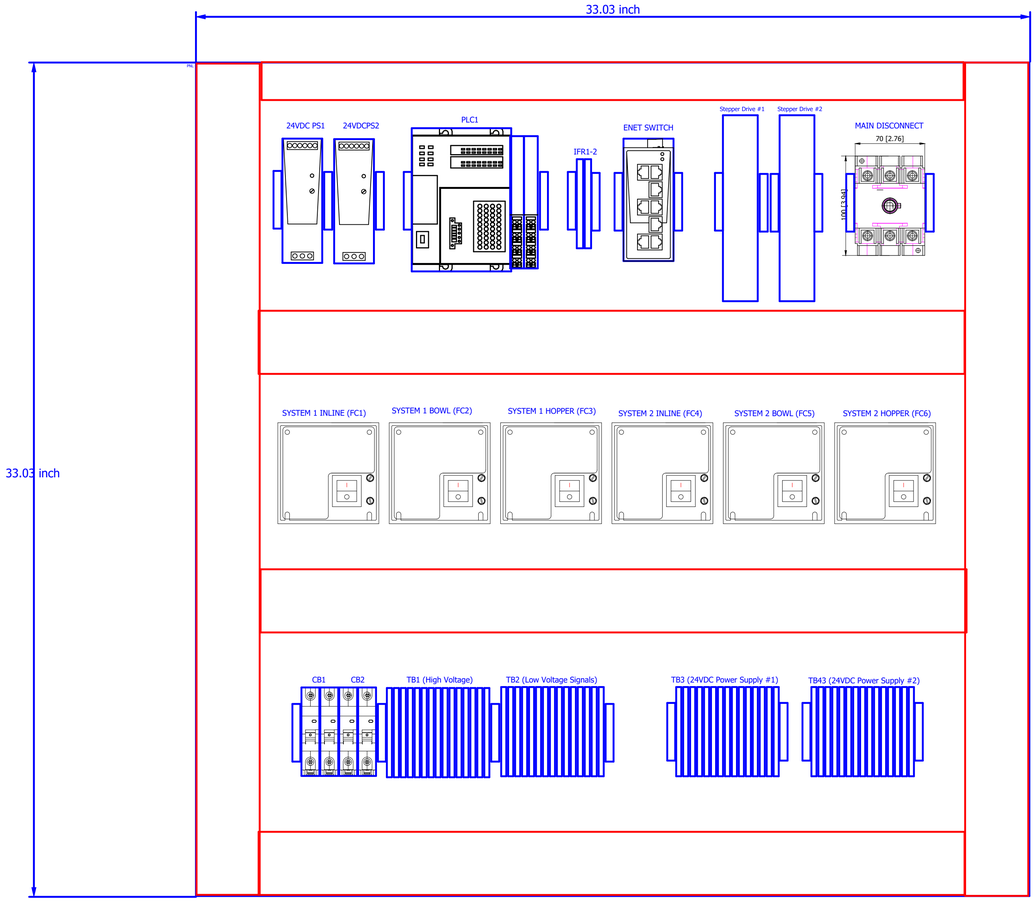

Feeding Concepts	Project name BTM FC-24-20467	Drawing number FC-24-20467CP Customer code	Customer Feeding Concepts 15235 Herriman Blvd.	Modification	Date	Name	Ed. Appr.	Date 06/05/24 11/23/24	Name Zach Beck Zachary Beck	Original Replacement of Replaced by Previous page 16	Panel Layout Commission Total no. of pages 18	Function designation = Page group 18	Location designation + Pg. 17 Next page 18

Saginaw Enclosure: SCE-36EL3608LP

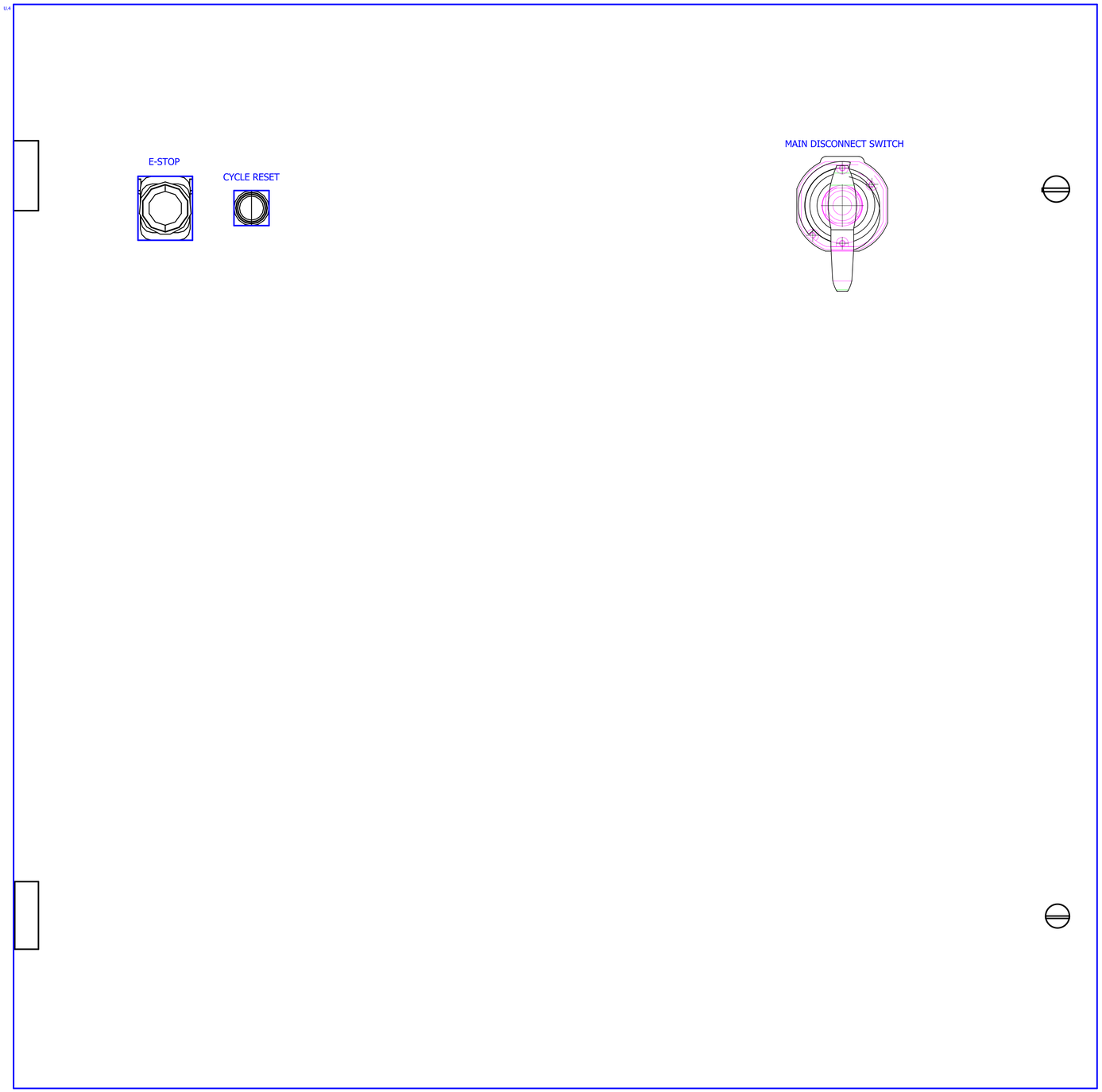

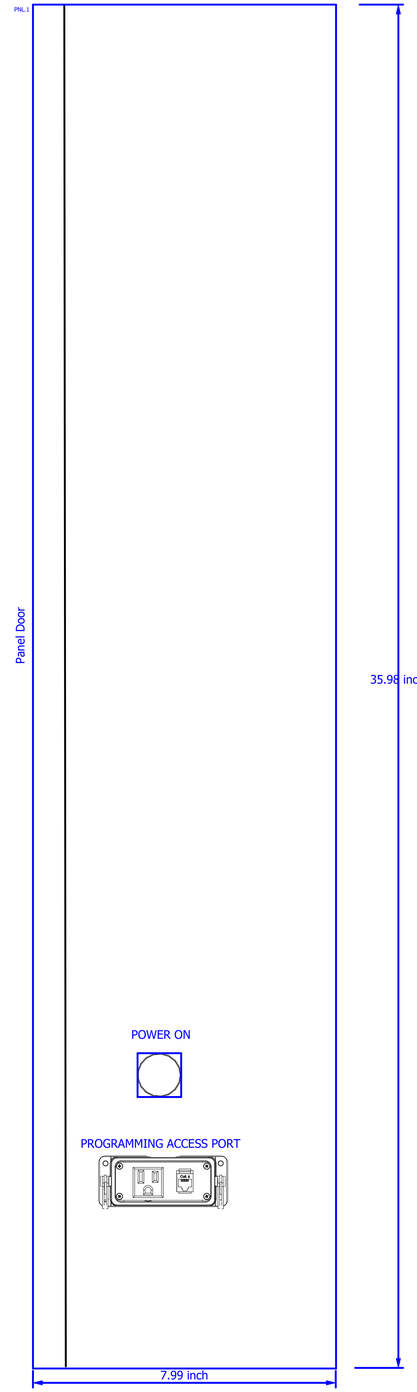

Feeding Concepts	Project name BTM FC-24-20467	Drawing number FC-24-20467CP Customer code	Customer Feeding Concepts 15235 Herriman Blvd.	Modification	Date	Name	Ed.	Date 06/05/24	Name Zach Beck	Original Replacement of	Enclosure Layout	Function designation =	Location designation +
							Appr.	11/23/24	Zachary Beck	Replaced by	Commission		Pg. 18
										Previous page 17	Total no. of pages 18	Page group 18	Next page